Miscelatore termostatico vasca THERMO_SLT25010

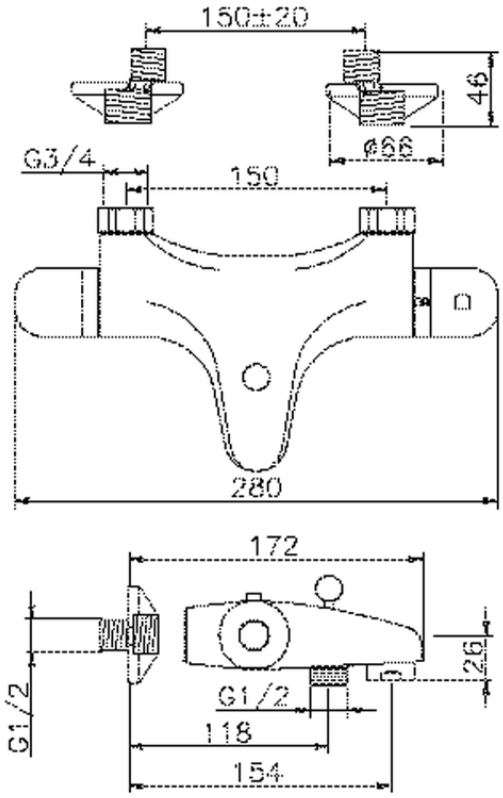

SLT25010

http://www.huberitalia.com/miscelatore-termostatico-vasca-thermo-slt25010

2025-04-01