Colonna vasca termostatica 3 funzioni VICTORIAN_592.VN31H.

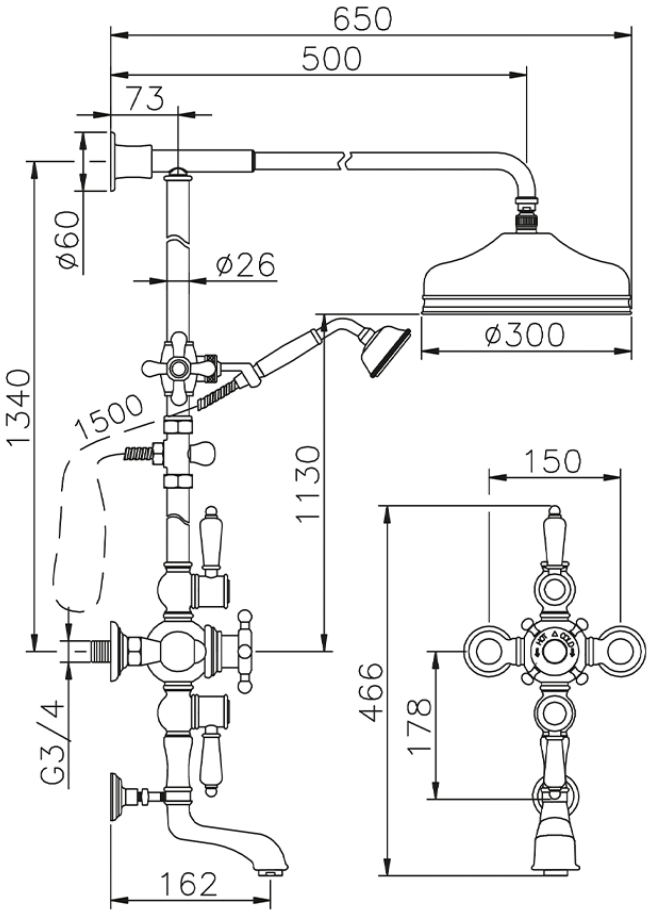

592.VN31H.

https://huberitalia.com/colonna-vasca-termostatica-3-funzioni-victorian-592-vn31h

2024-10-29