Miscelatore monocomando bidet DADO

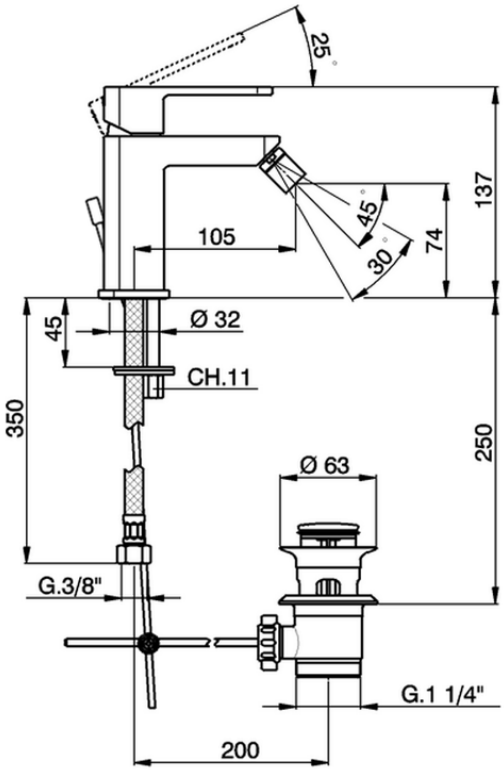

DD000550

https://huberitalia.com/miscelatore-monocomando-bidet-dadodd000550

2024-04-30